SAMSUNG CONFIDENTIAL
THIS DOCUMENT CONTAINS CONFIDENTIAL
AND PROPRIETARY INFORMATION THAT IS
SAMSUNG ELECTRONICS CO'S PROPERTY.
DO NOT DISCLOSE TO OR DUPLICATE FOR OTHERS
EXCEPT AS AUTHORIZED BY SAMSUNG.

GT-I9500_MAIN_REV 0.7

2013.02.14

REFERENCE

sheet01 :	GSM / WCDMA	**100**
sheet03 :	CP(XMM6360)	**300**
sheet05 :	AP(ADONIS)	**5000**
sheet06 :	AP PMIC, IF PMIC	**600**
sheet07 :	CAM, LCD, MHL	**700**
sheet08 :	GPS, BT/WIFI, NFC, SENSOR HUB, SENSORS	**800**
sheet09 :	AUDIO	**900**
sheet10 :	CONNECTORS, BAR CODER	**1000**

Samsung Confidential

Engineer	SAMSUNG ELECTRONICS	
Drawn by:		
R&D Chk:	TITLE: GT-I9500	SIZE: A1
DOC CTRL Chk:		
UPC ENG Chk:		
QA Chk:	Drawing Number	SHEET 00/07

Changed by: | Date Changed: | Time Changed:

SAMSUNG CONFIDENTIAL
THIS DOCUMENT CONTAINS CONFIDENTIAL
AND PROPRIETARY INFORMATION OF
SAMSUNG ELECTRONICS CO'S PROPERTY.
DO NOT DISCLOSE TO OR DUPLICATE FOR OTHERS
EXCEPT AS AUTHORIZED BY SAMSUNG.

RF Part

2013.02.14

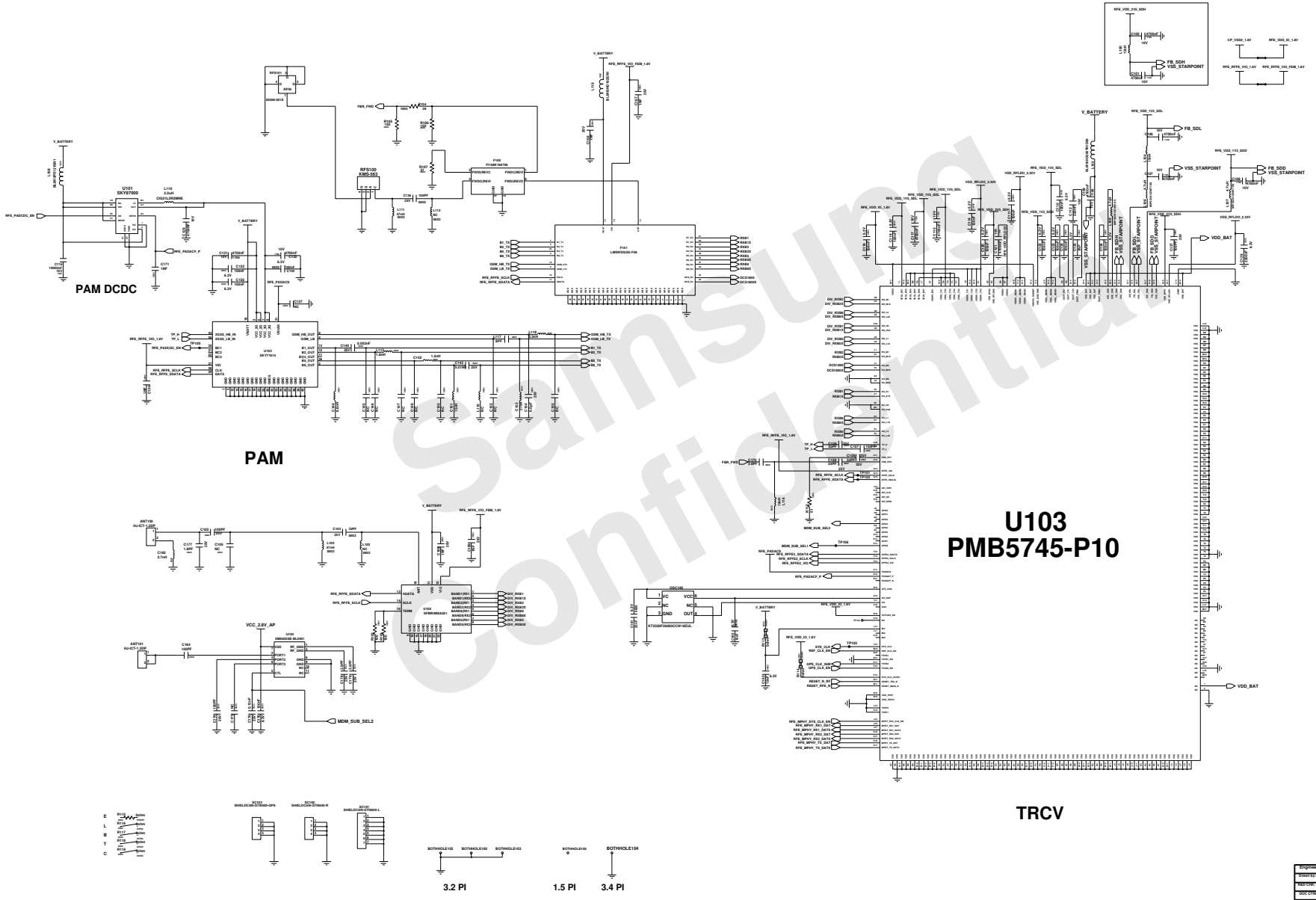

Samsung Confidential

Engineer	
Issued by	RF
R&D CHK:	TITLE:
DOC CTRL CHK:	GT-I9500_REV0.7
MFG ENGR CHK:	
QA CHK:	Drawing Number 2/6

Changed By	Date Changed	Time Changed

SAMSUNG CONFIDENTIAL
THIS DOCUMENT CONTAINS CONFIDENTIAL
AND PROPRIETARY INFORMATION OF
SAMSUNG ELECTRONICS CO'S PROPERTY.
DO NOT DISCLOSE TO OR DUPLICATE FOR OTHERS
EXCEPT AS AUTHORIZED BY SAMSUNG.

CONNECTOR

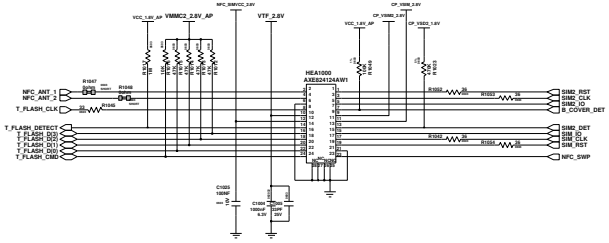

SIM/SD CON

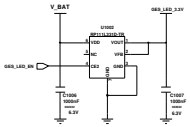

Gesture Sensor LDO

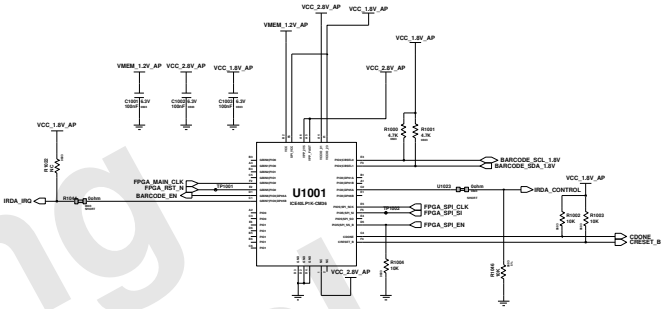

BAR CODER

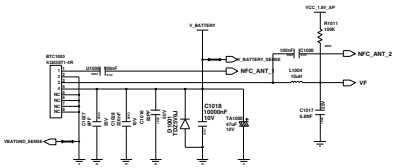

Battery Connector

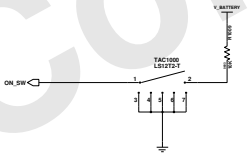

PWR key

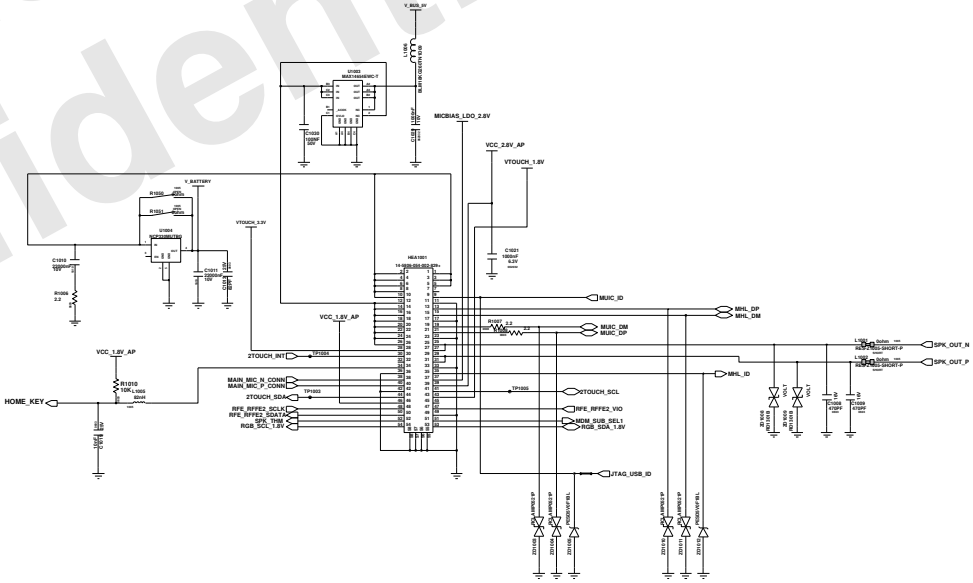

SUB PCB CON.

Samsung Confidential

Engineer	
Issued by	
R&D CHK.	TITLE:
DOC CTRL CHK.	GT-I9500_REV0.7
MFG ENGR CHK.	
QA CHK.	Drawing Number

SAMSUNG CONFIDENTIAL
THIS DOCUMENT CONTAINS CONFIDENTIAL AND PROPRIETARY INFORMATION OF SAMSUNG ELECTRONICS CO'S PROPERTY. DO NOT DISCLOSE TO OR DUPLICATE FOR OTHERS EXCEPT AS AUTHORIZED BY SAMSUNG.

CP Part (XMM6360)

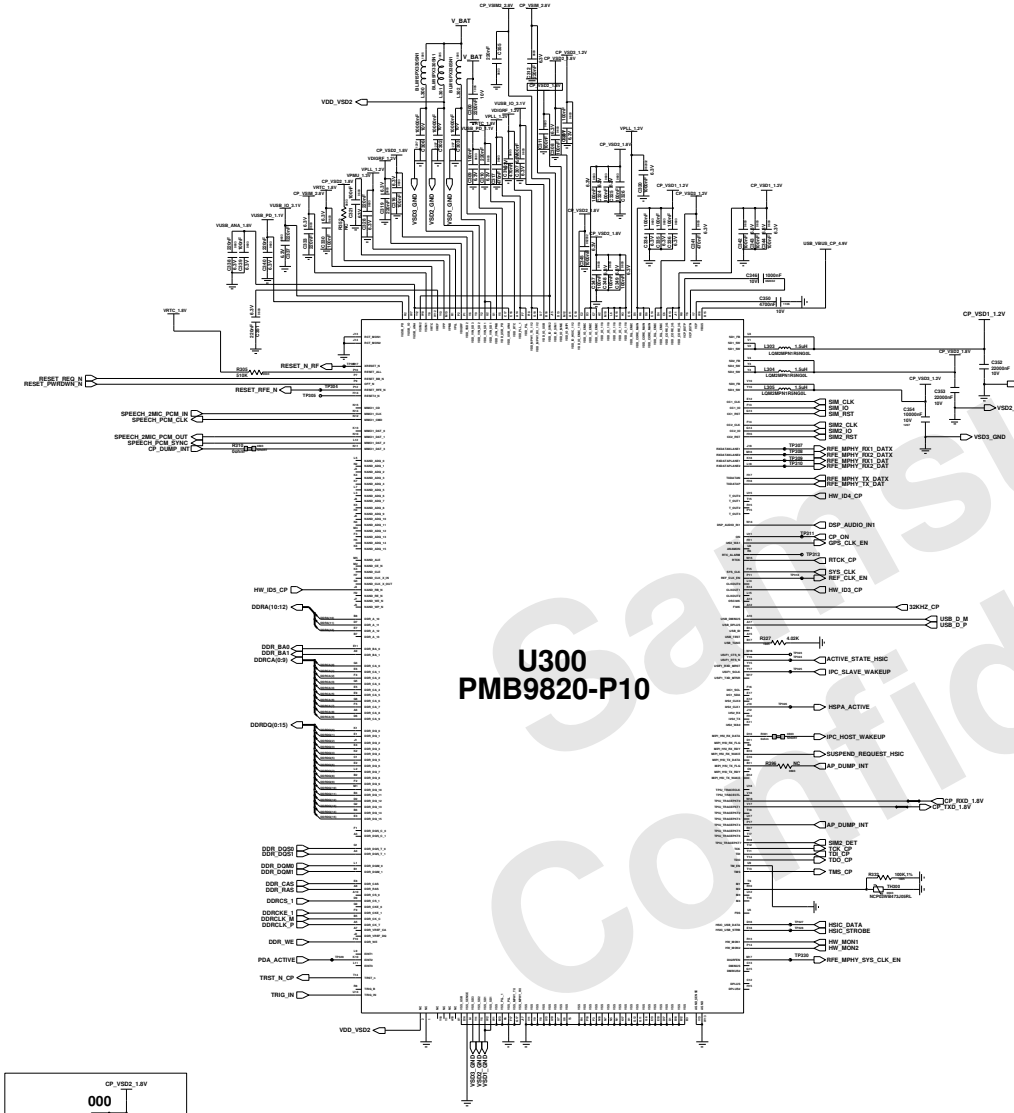

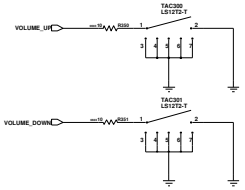

VOL KEY

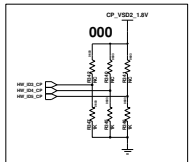

CP HW Version Check

BOOT MODE

boot cfg	DSP_AUDIO_IN1	HW_MON1	HW_MON2	TRIG_IN	Description
0 1	0	0	0	1	DDR(MVIEMIC)
0 3	0	0	1	1	C2C 1(1RRX / 8TX)
0 4	0	1	0	0	C2C 2(16RX / 16TX)
0 5	0	1	0	1	NAND FLASH(NANDCTRL)
0 9	1	0	0	1	EMMC(SDMMC1)
1 2	1	1	0	0	FLASHLESS BOOT, BB chip set to C2C 2
1 3	1	1	0	1	FLASHLESS BOOT, BB chip set to C2C 1
1 4	1	1	1	0	FLASHLESS BOOT, BB chip set to EMIC

DWG REF:	SAMSUNG ELECTRONICS		
DFSPT DU:			
REV CHK:	TITLE:	SIZE A4	
DOC CTRL CHK:	GT-I9500_REV0.7	16.1.12.A	
RFS ENGR CHK:			
DWG/QRD DU: user1	DATE DWG/QRD: Thursday, June 13, 2013	TIME DWG/QRD: 10:39:31 am	QA CHK: REV: DFSPT/TQ NUMBER: PAGE: 1

Samsung Confidential

SAMSUNG CONFIDENTIAL
THIS DOCUMENT CONTAINS SAMSUNG CONFIDENTIAL INFORMATION.
SAMSUNG ELECTRONICS CO.LTD PROPERTY.
DISCLOSURE, REPRODUCTION OR USE WITHOUT WRITTEN AUTHORIZATION IS PROHIBITED.

EXYNOS5410, MOVINAND+DDR

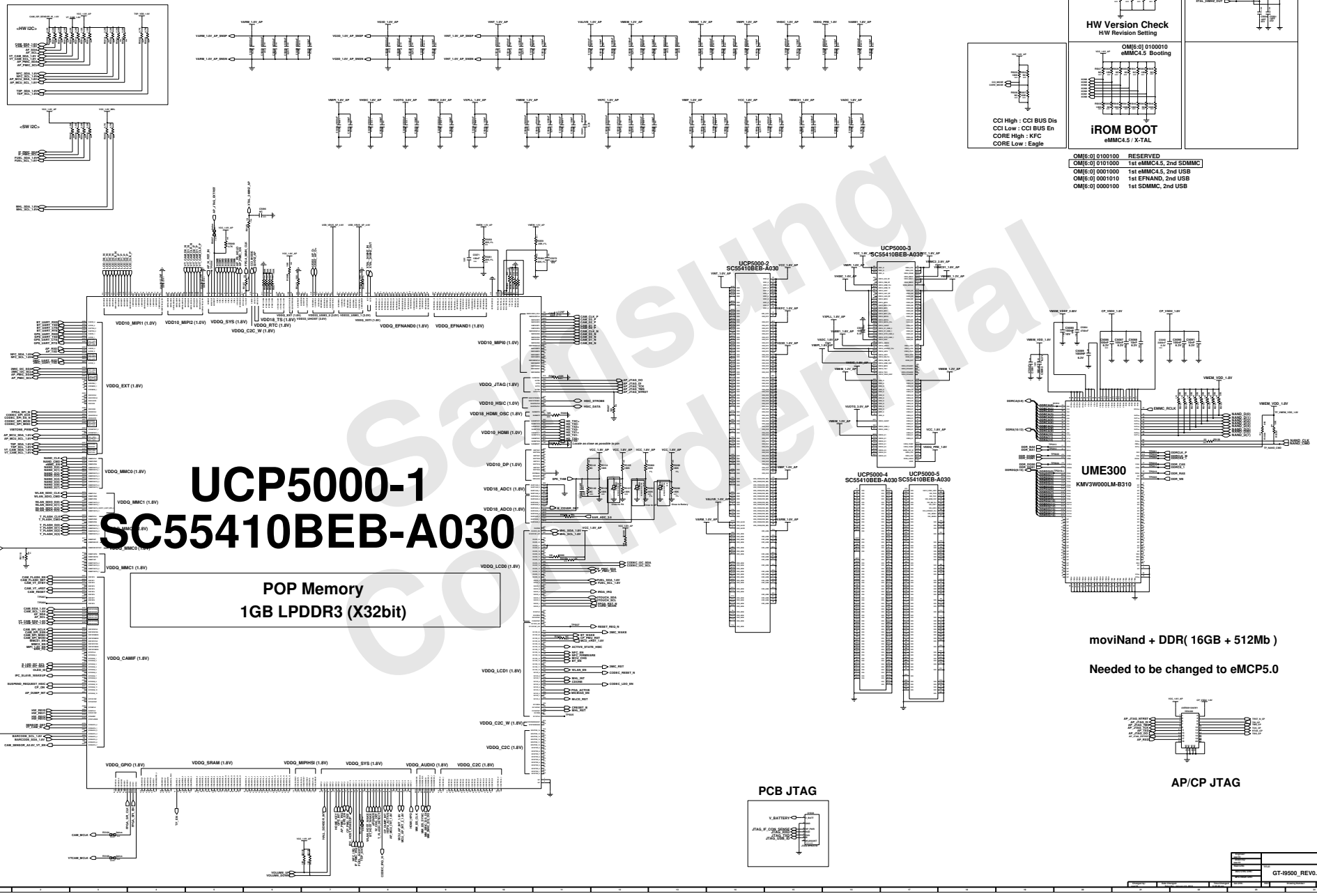

Samsung Confidential

SAMSUNG CONFIDENTIAL
THIS DOCUMENT CONTAINS CONFIDENTIAL AND PROPRIETARY INFORMATION OF SAMSUNG ELECTRONICS CO'S PROPERTY. DO NOT DISCLOSE TO OR DUPLICATE FOR OTHERS EXCEPT AS AUTHORIZED BY SAMSUNG.

PMIC Part

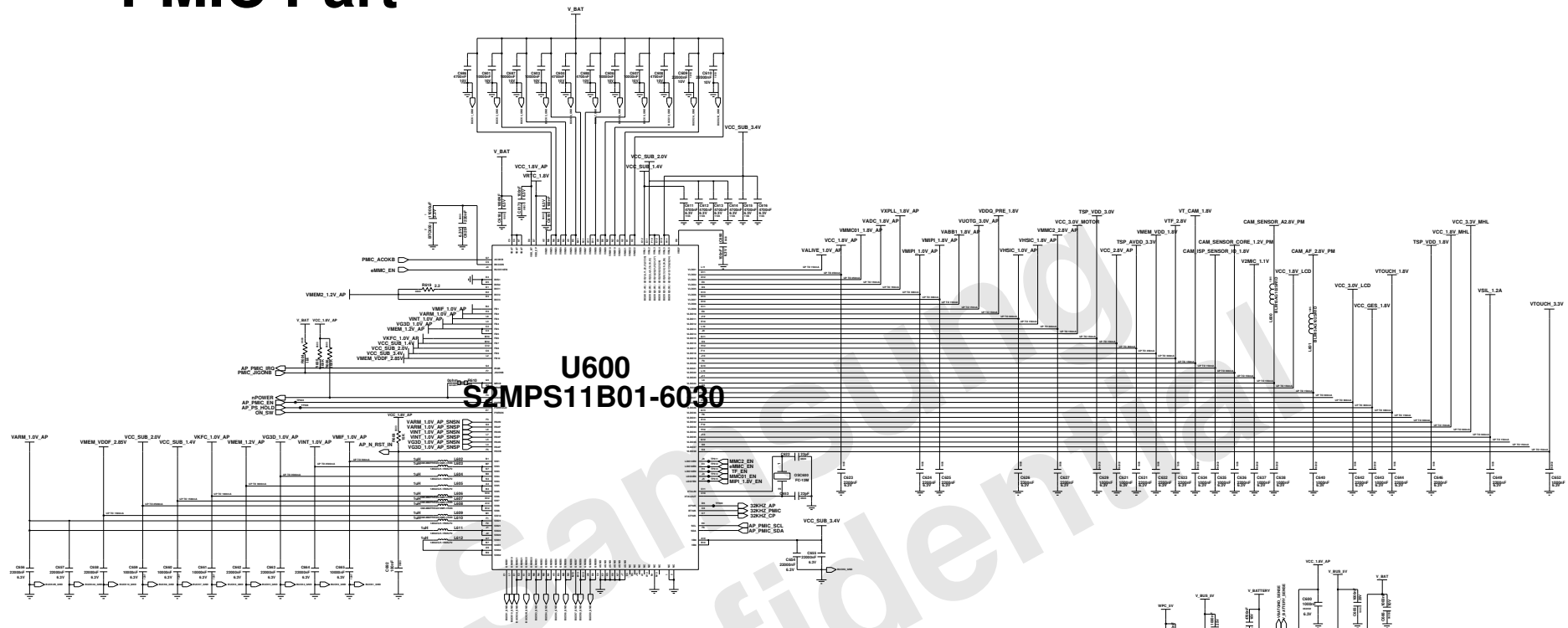

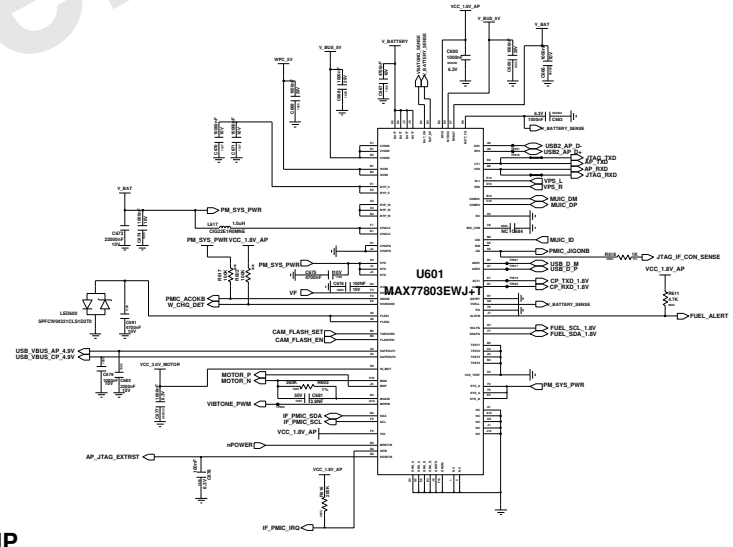

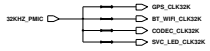

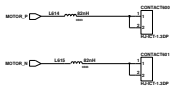

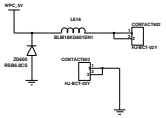

MOTOR PAD

IF CHIP

(CHARGER, WIRELESS CHARGING SWITCH+OVP, OTG, FLESH LED DR.IC, FUEL GAUGE, MUIC, PWR PATH SEPARATION, MOTOR DR.IC)

Engineer	
Design By:	
R&D CHK:	TITLE:
DOC CTRL CHK:	GT-I9500_REV0.7
MFG ENGR CHK:	
QA CHK:	Drawing Number

REV: A1

Changed By | Date Changed | Time Changed

SAMSUNG CONFIDENTIAL
THIS DOCUMENT CONTAINS CONFIDENTIAL
AND PROPRIETARY INFORMATION OF
SAMSUNG ELECTRONICS CO'S PROPERTY.
DO NOT DISCLOSE TO OR DUPLICATE FOR OTHERS
EXCEPT AS AUTHORIZED BY SAMSUNG.

CAMERA PART

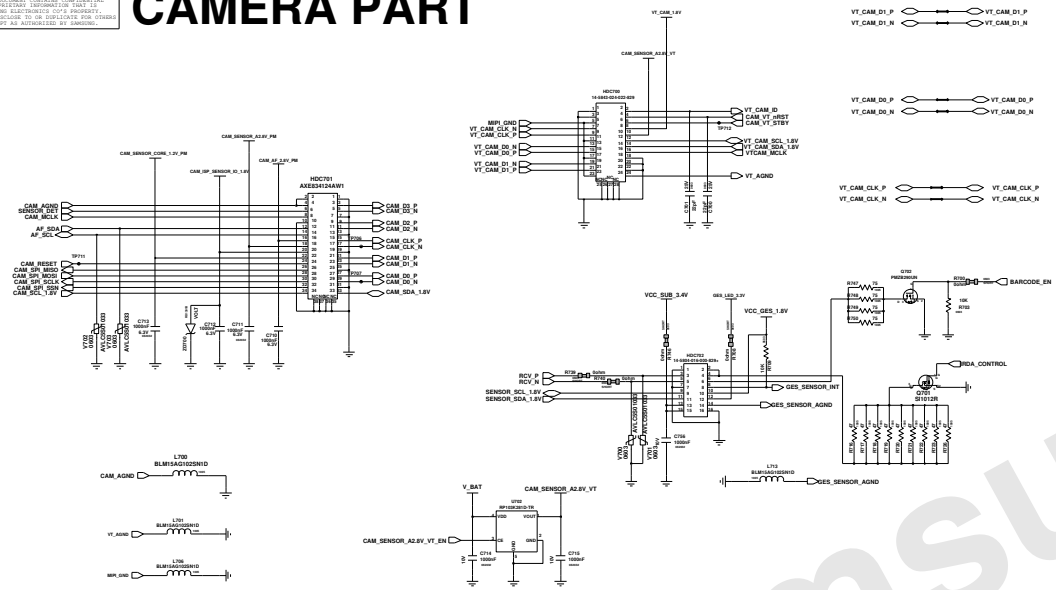

LCD Conector(MIPI)

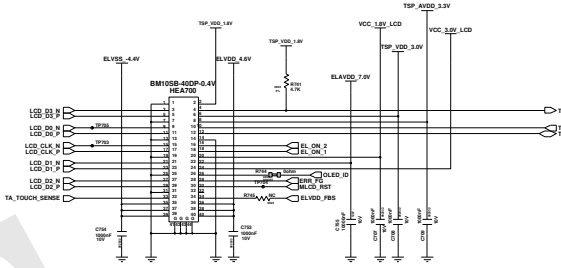

MHL PART

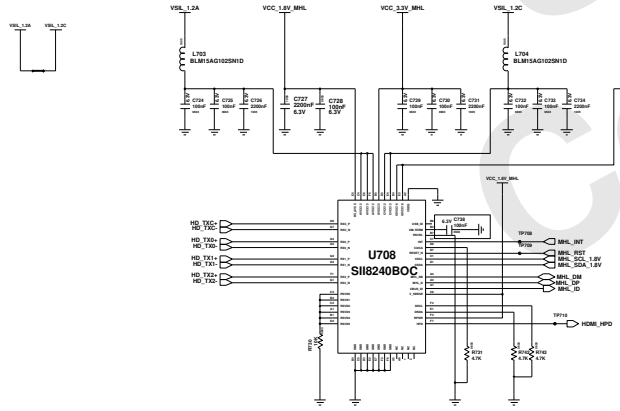

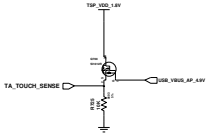

LCD DCDC

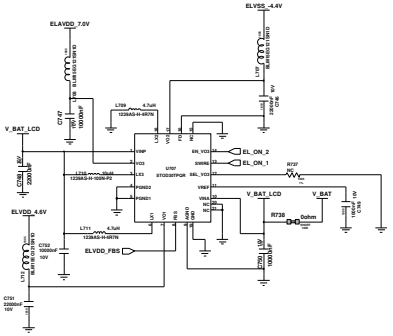

Samsung Confidential

Engineer:	
Drawn by:	
Check by:	
RED CHK:	
DOC CTRL CHK:	
BPG ENGR CHK:	
QA CHK:	
TITLE:	GT-I9500_REV0.7
REV:	A1
Drawing Number:	6747

Changed By: jack | Date Changed: Monday, November 25, 2013 | Time Changed: 6:39:13 am

SAMSUNG CONFIDENTIAL
THIS DOCUMENT CONTAINS CONFIDENTIAL
AND PROPRIETARY INFORMATION OF
SAMSUNG ELECTRONICS CO'S PROPERTY.
DO NOT DISCLOSE TO OR DUPLICATE FOR OTHERS
EXCEPT AS AUTHORIZED BY SAMSUNG.

GPS

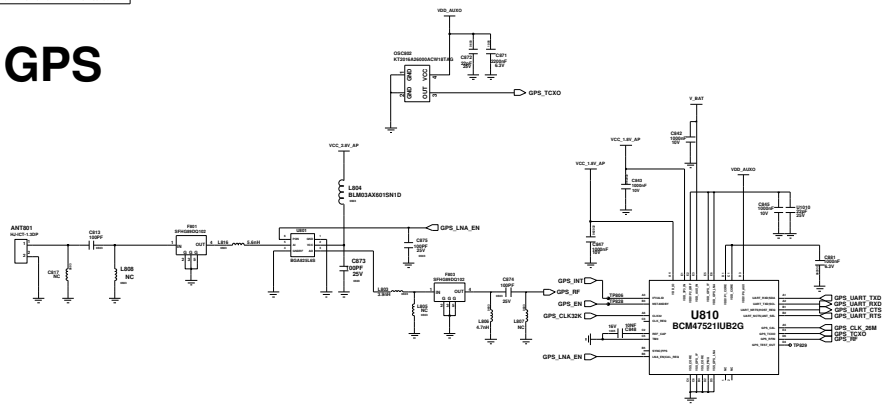

GPS(BCM47521)

BT/WIFI

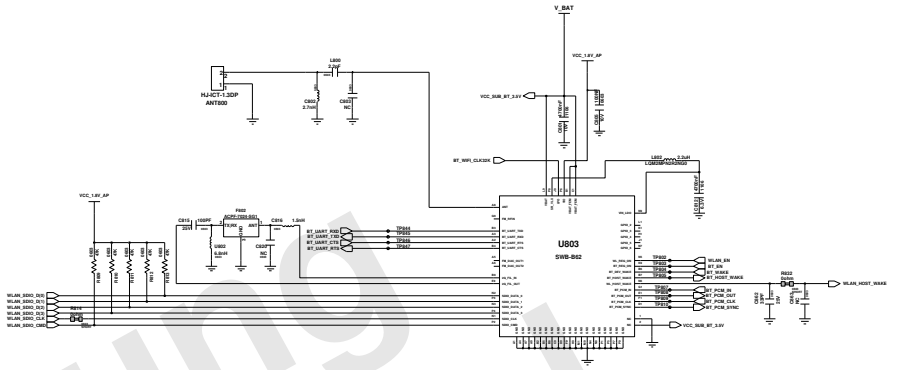

BT / WIFI

SENSOR HUB

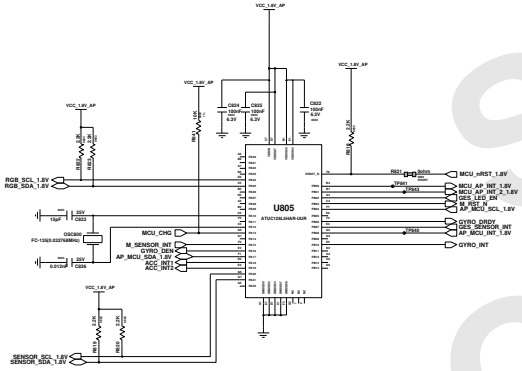

NFC

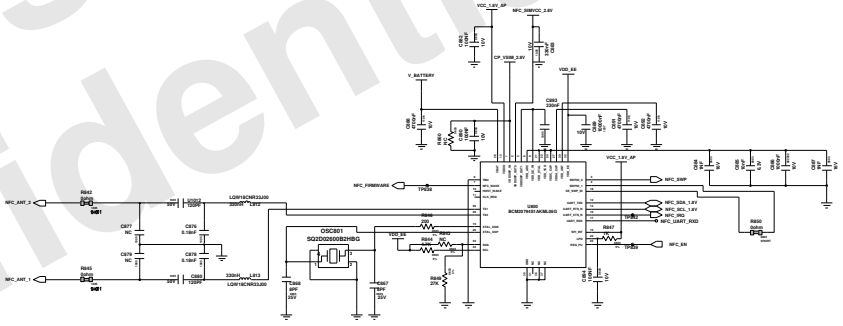

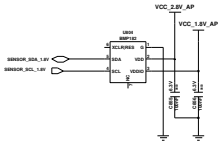

Barometer Sensor

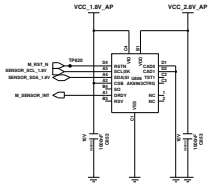

Magnetic Sensor

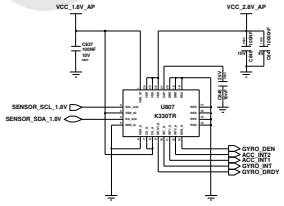

6 Axics Sensor (GYRO,ACCEL)

Engineer	
Design Eng.	
R&D CTRL CHK.	TITLE:
DOC CTRL CHK.	GT-I9500_REV0.7
MFG ENGR CHK.	
QA CHK.	Drawing Number

SIZE A1

Changed By	Date Changed	Time Changed

SAMSUNG CONFIDENTIAL
THIS DOCUMENT CONTAINS CONFIDENTIAL AND PROPRIETARY INFORMATION OF SAMSUNG ELECTRONICS CO'S PROPERTY. DO NOT DISCLOSE TO OR DUPLICATE FOR OTHERS EXCEPT AS AUTHORIZED BY SAMSUNG.

AUDIO

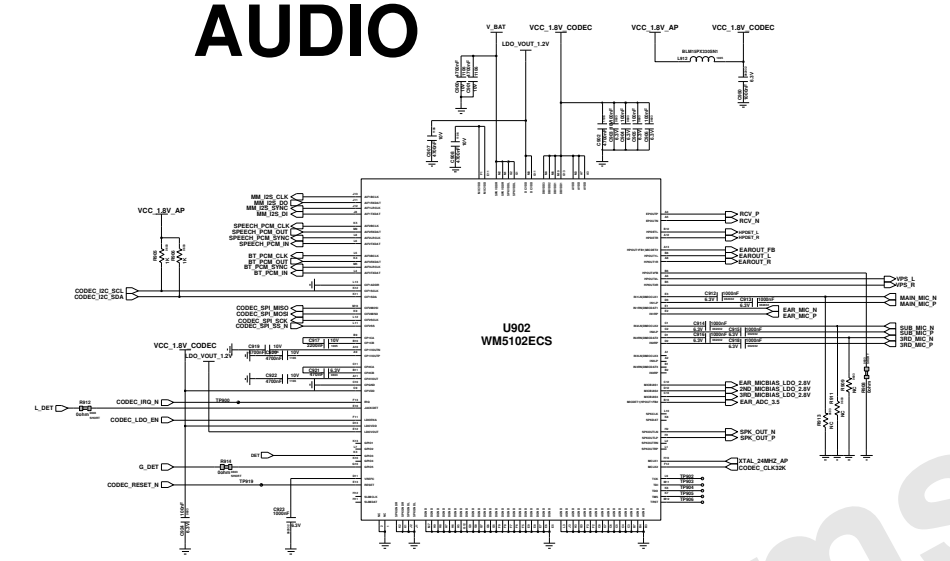

CODEC

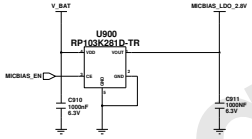

MIC BIAS LDOs

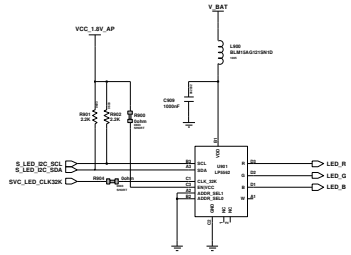

Light-Guide LED Driver

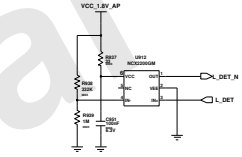

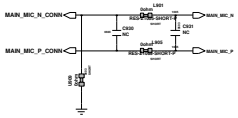

Main MIC

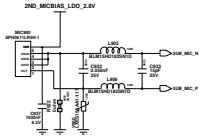

2nd MIC

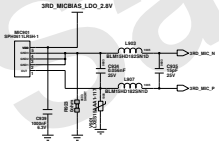

3rd MIC

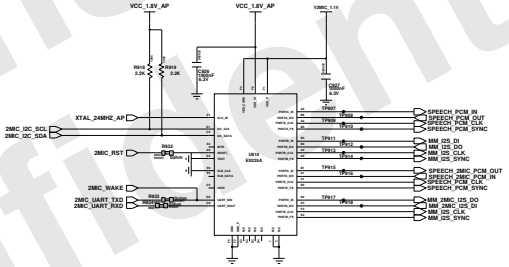

2MIC IC

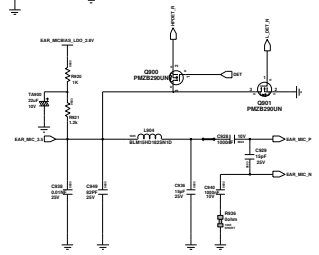

Ear MIC

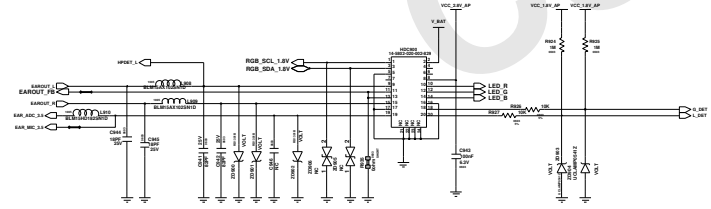

E/J + RGB + SVC LED

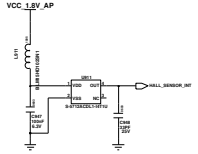

HALL SENSOR

Samsung Confidential

Engineer	
Issue No	
R&D CHK	TITLE:
DOC CTRL CHK	GT-I9500_REV0.7
MFG ENGR CHK	
QA CHK	Drawing Number 08/07

Changed By | Date Changed | Time Changed

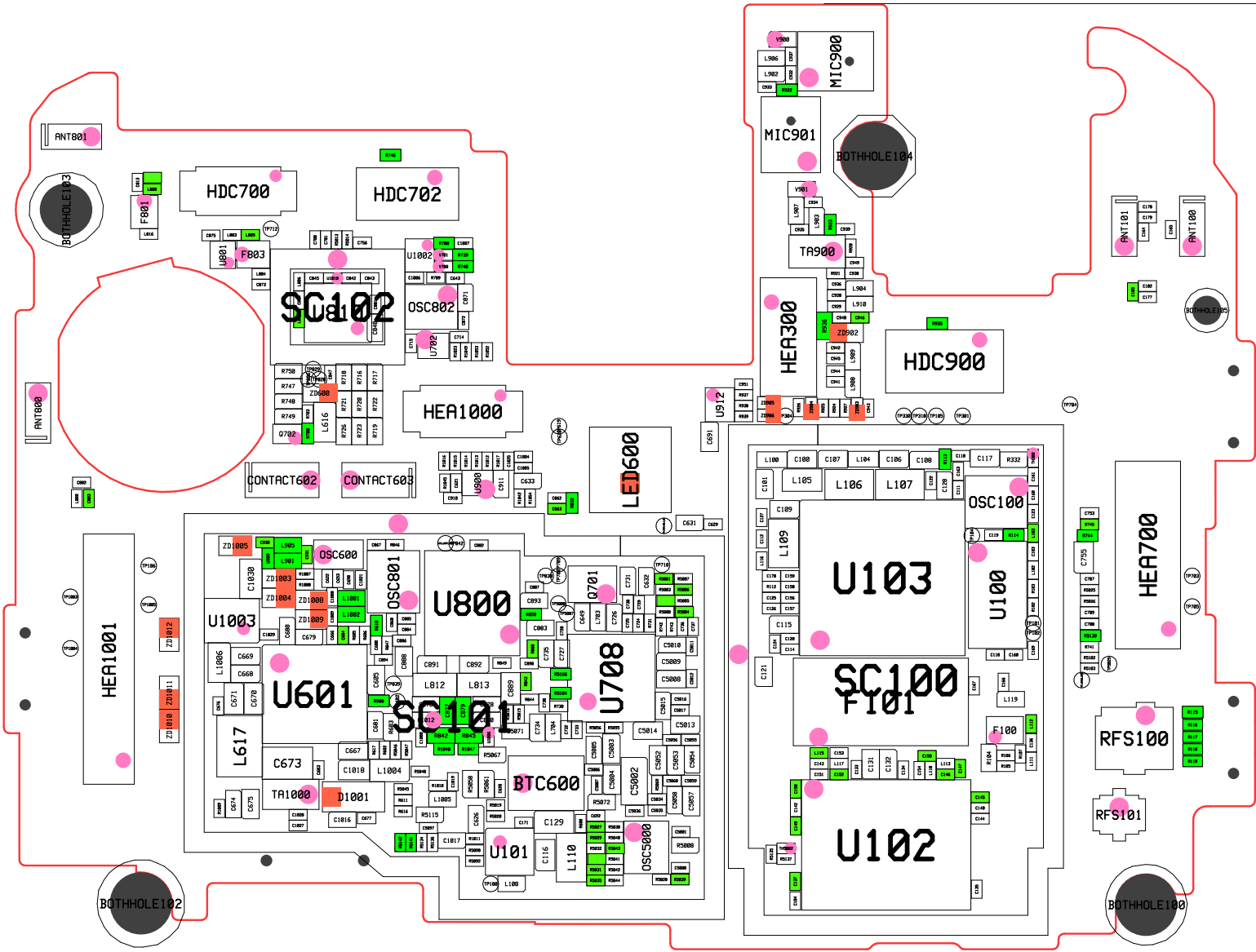
ANT801
BOTHOLE103
HDC700
HDC702
F801
F803
U801
U1002
SC102
OSC802
U702
ZD600
L616
HEA1000
CONTACT602
CONTACT603
U900
LED600
U912
MIC900
MIC901
BOTHOLE104
TA900
HEA300
ZD902
HDC900
ANT101
ANT100
BOTHOLE105
ANT800
HEA1001
ZD1012
ZD1010
ZD1011
OSC600
OSC801
U800
Q701
U708
U1003
U601
SC101
L617
C673
TA1000
D1001
BTC600
U101
OSC5000
BOTHOLE102
L105
L106
L107
OSC100
U103
U100
SC100
FI01
F100
U102
HEA700
RFS100
RFS101
BOTHOLE100

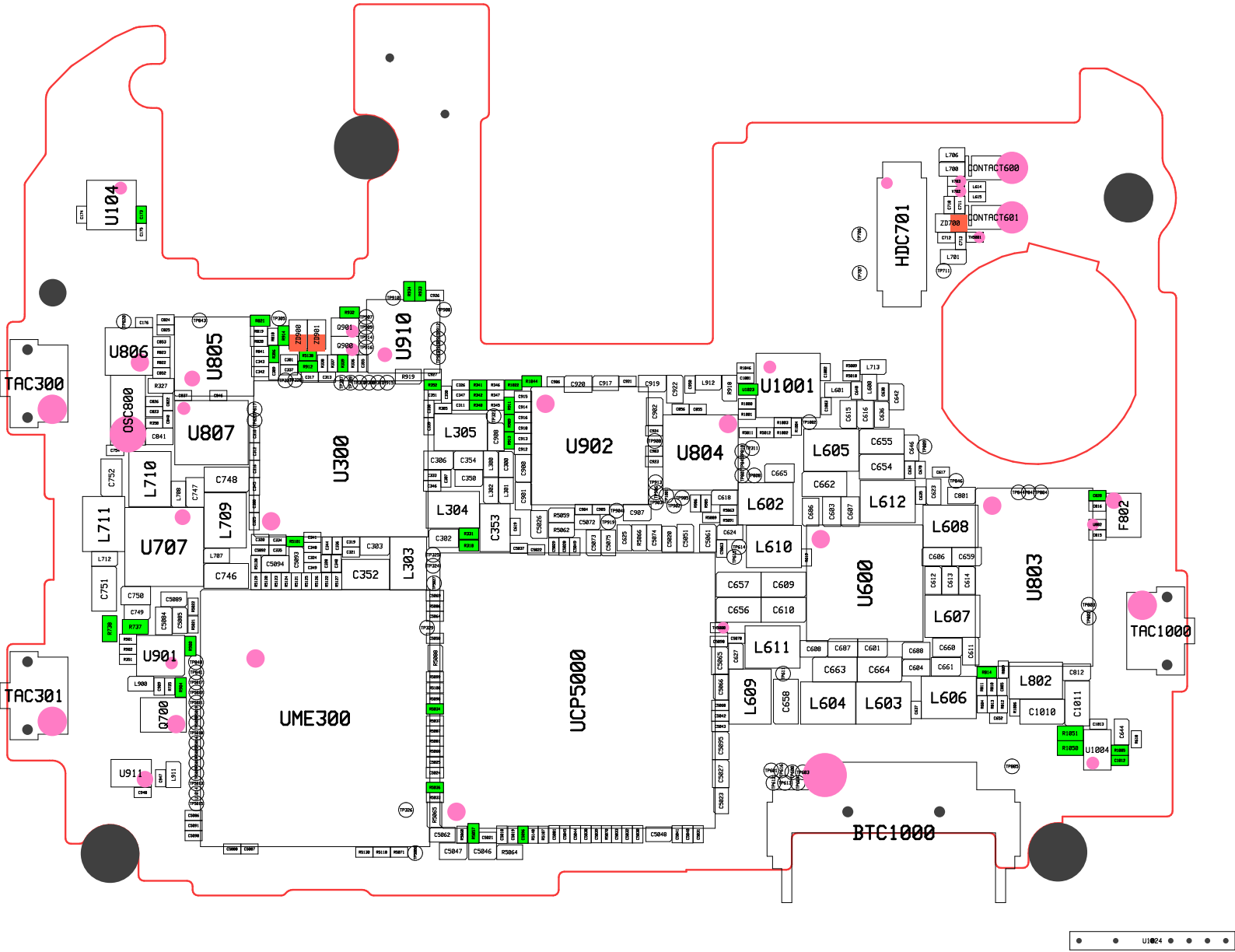
U104
U806
U805
U910
TAC300
OSC800
U807
U300
L305
U902
U804
U1001
HDC701
CONTACT600
CONTACT601
ZD700
L710
C748
L711
L709
U707
L304
C353
L303
C352
C746
L605
C655
C654
C662
L602
L612
L608
F802
U600
U803
L610
C657
C609
C656
C610
L607
TAC1000
U901
Q700
UME300
UCP5000
L611
L609
L604
L603
L606
L802
C1010
C1011
U1004
TAC301
U911
BTC1000